Model No.CL002G CORDLESS CLEANER

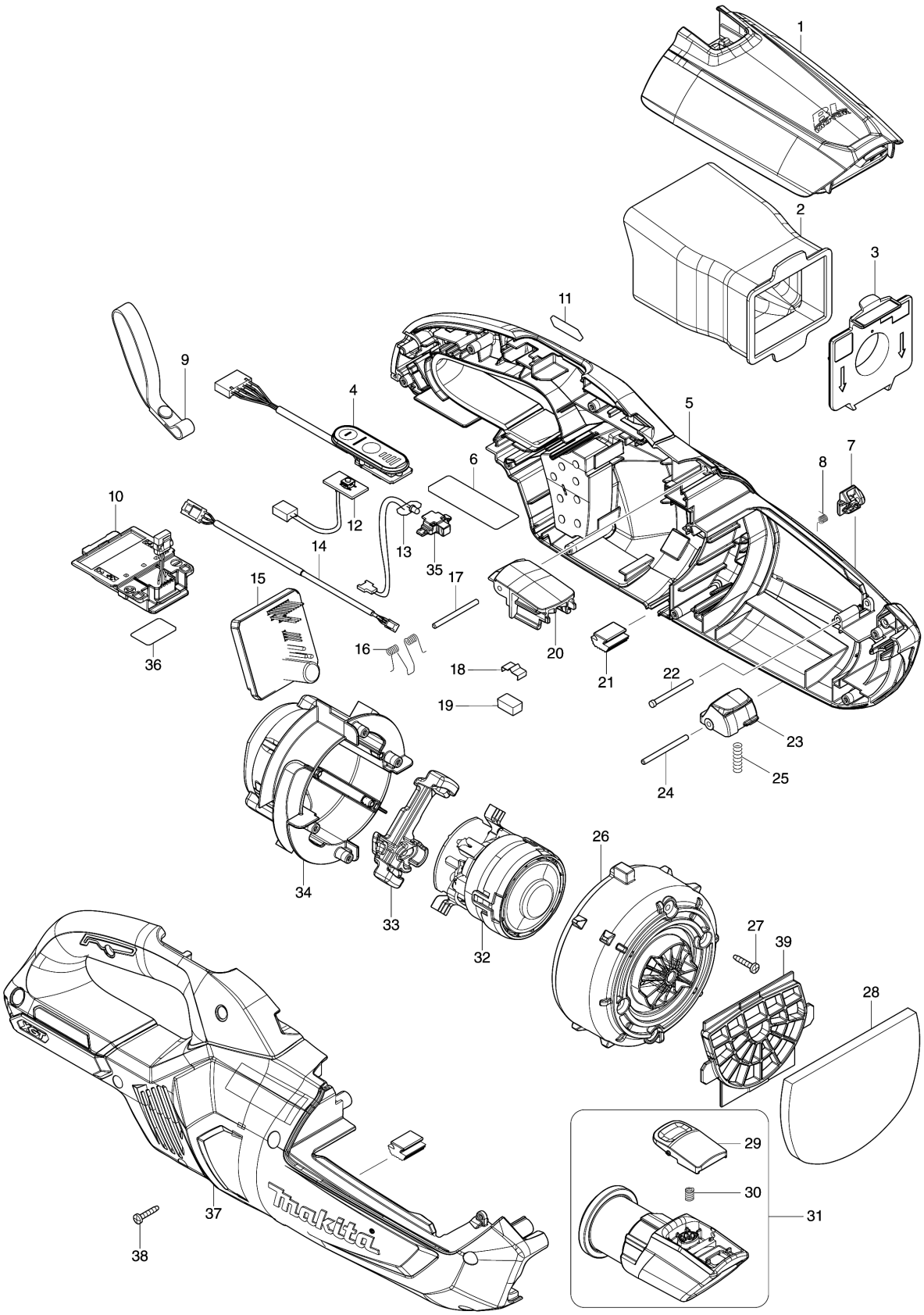

Model No.CL002G CORDLESS CLEANER

Položka	Číslo dílu	Popis	Změna	Množství	New/Old	Možnost 1	Možnost 2	Poznámka
001	141F22-8	FRONT COVER COMPLETE		1				
C10	424093-7	SEAL		1				
002	198749-5	EASY SHAKE OFF DUST BAG SET EU		1	*			
002-1	1910M4-5	HIGH PERFORMANCE DUST BAG SET	<	1				
003	140K23-3	VALVE STAY COMPLETE		1				
004	141B54-1	INDICATION CIRCUIT COMPLETE		1				
C10	8031J2-9	SWITCH LABEL		1				
005	183U76-9	HOUSING SET		1				
C10	263005-3	RUBBER PIN 6		2				
C20	422714-5	SPONGE SEAT		2				
D10		INC. 21,37						
006	8115A3-4	CL002G NAME PLATE		1				
007	459352-0	STOPPER PLATE		1				
008	232484-6	TORSION SPRING 4		1				
010	632P65-6	TERMINAL UNIT		1				
011	8005T5-8	XGT LOGO LABEL		1				
012	620E74-1	SWITCH UNIT		1				
013	620E82-2	LED CIRCUIT		1				
014	632S32-9	LEAD UNIT		1				
015	620E90-3	CONTROLLER		1				
016	233580-3	TORSION SPRING 4		1				
017	268271-7	PIN 3		1				
018	232264-0	LEAF SPRING		1				
019	424367-6	RUBBER		1				
020	459350-4	FRONT COVER JOINT		1				
021	422460-0	RUBBER PLATE		2				
022	256590-3	FLAT FILLISTER HD. PIN 3		1				
023	459348-1	BUTTON B		1				
024	268271-7	PIN 3		1				
025	233344-5	COMPRESSION SPRING 4		1				
026	413645-9	MOTOR COVER F		1				
027	266429-2	TAPPING SCREW 3X16		4				
028	424804-0	SPONGE SHEET 76-110		1				
029	413F33-6	BUTTON C		1				
030	232485-4	COMPRESSION SPRING 5		1				
031	136587-7	INLET ASS'Y		1				
C10	424094-5	PACKING		1				
D10		INC. 29,30						
032	629A46-9	MOTOR ASSEMBLY		1				
033	422723-4	MOTOR COVER SEAL		1				
034	141E55-7	MOTOR COVER R COMPLETE		1				
C10	263002-9	RUBBER PIN 4		4				
035	141H09-2	LED CASE COMPLETE		1				
036	8115A9-2	CL002G SERIAL NO. LABEL		1				

Please order the parts with part number.

Print Date 3/6/2022

Model No.CL002G CORDLESS CLEANER

Položka	Číslo dílu	Popis	Změna	Množství	New/Old	Možnost 1	Možnost 2	Poznámka
037	183U76-9	HOUSING SET		1				
C10	263005-3	RUBBER PIN 6		2				
C20	422714-5	SPONGE SEAT		2				
D10		INC. 5,21						
038	266429-2	TAPPING SCREW 3X16		9				
039	413J77-0	GUARD		1				
A01	127827-4	NOZZLE ASSEMBLY		1				
A02	413859-0	SASH NOZZLE		1				
A03	459355-4	NOZZLE HOLDER		1				
A04	459356-2	PIPE		1				
A09	194566-1	PAPER FILTER SET (5PCS/SET)		1				
A10B	***DC40RA	DC40RA FAST CHARGER		1				
D10		COMPO-PARTS						
A11B	191B36-3	BATTERY BL4025 SET		2				
A12B	412393-7	BATTERY COVER		2				
E01	688163-8	LINE FILTER		1				

Please order the parts with part number.

Print Date 3/6/2022